Experiment No. 8	
ENCODERS	
Course Code: CPE 013	**Program: BSCpE**
Course Title: Logic Circuits and Design	**Date Performed:** 5/3/2026
Section: BSCpE22S2	**Date Submitted:** 5/3/2026
Members: Bulaong, Ross Andrew D.	**Instructor:** Engr. Noel Lusung
Florencio, David	
Malabanan, Nadine	
Que, Josef Leroy	
Zapanta, Russell	

1. Objective:

This activity aims to demonstrate and implement the concept of encoders.

2. Intended Learning Outcomes (ILOs):

The students should be able to:
2.1. Demonstrate the process of how encoder works.
2.2. Construct truth table and simulate circuit diagram for 8-inputs to BCD output.

3. Discussion

Encoders
An encoder is a combinational circuit that converts binary information in the form of a 2N input lines into N output lines, which represent N bit code for the input. For simple encoders, it is assumed that only one input line is active at a time.

As an example, let's consider Octal to Binary encoder. As shown in the following figure, an octal-to-binary encoder takes 8 input lines and generates 3 output lines.

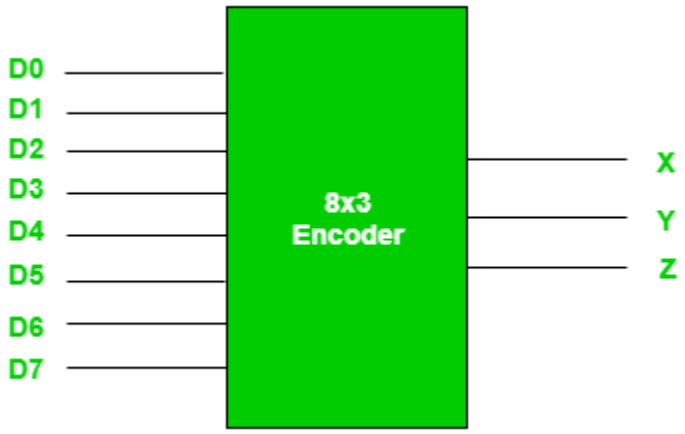

Figure 8.1 Octal to Binary Encoder

One limitation of this encoder is that only one input can be active at any given time. If more than one inputs are active, then the output is undefined. For example, if D6 and D3 are both active, then, our output would be 111 which is the output for D7. To overcome this, we use Priority Encoders.

Another ambiguity arises when all inputs are 0. In this case, encoder outputs 000 which actually is the output for D0 active. In order to avoid this, an extra bit can be added to the output, called the valid bit which is 0 when all inputs are 0 and 1 otherwise.

4. Resources:

Materials:

- Personal Computer
- Internet connection

  Simulation Tools:
  - TinkerCAD
  - Logicly

5. Procedure:

1. Construct and simulate the circuit as shown in Figure 7.1 in Logicly.

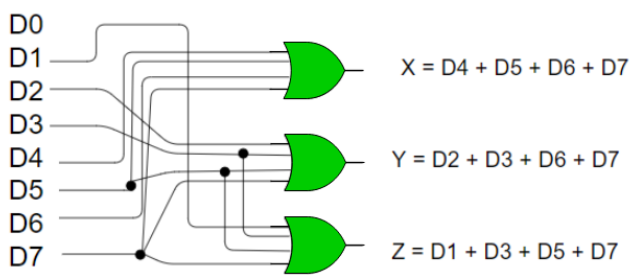

Figure 8.2. Octal to Binary Encoder Logic Diagram

2. Apply the different combinations to the data switches and observe the corresponding output in every combination. Record each state in Table 8.1 in section 6. Take the screenshot of each combination in Logicly.
3. Make a modification in Figure 8.2 based on the ambiguity and limitation of encoder that was mentioned in the Discussion part.
4. Redraw the diagram based on step 3 and simulate in Logicly.
5. Apply the different combinations to the data switches and observe the corresponding output in every combination. Record each state in in Table 8.2 in section 6. Take the screenshot of each combination in Logicly.

Problem 1:

Construct and simulate in TinkerCAD the given Figure 8.3 below. Apply the different combinations to the data switches and observe the corresponding output in every combination. Record each state in in Table 8.3 in

section 6. Take the screenshot of each combination in TinkerCAD.

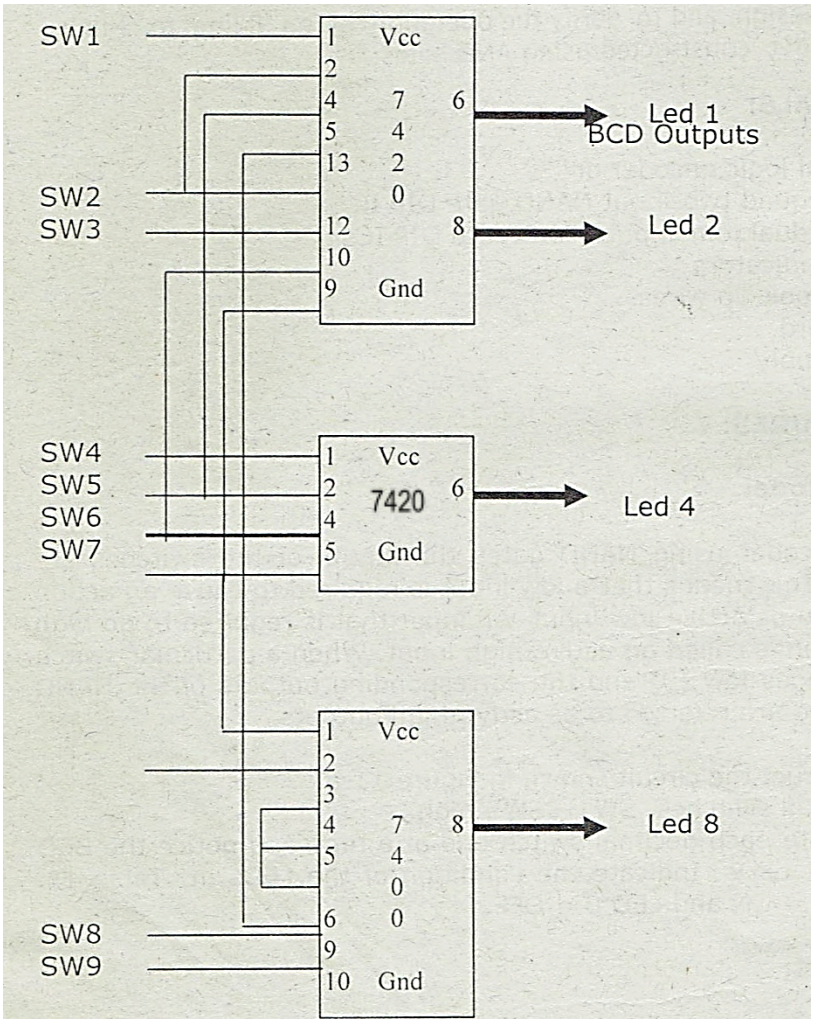

Figure 8.3. Decimal to BCD Encoder Block Diagram

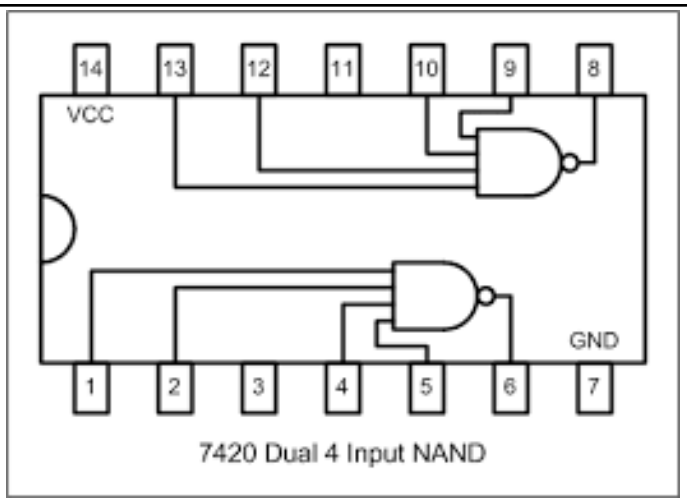

Figure 8.4. 74LS20 Pin Configuration

. **Data and Results:**

INPUT								OUTPUT			RESULT SIMULATION
D7	D6	D5	D4	D3	D2	D1	D0	X	Y	Z	
0	0	0	0	0	0	0	1	0	0	0	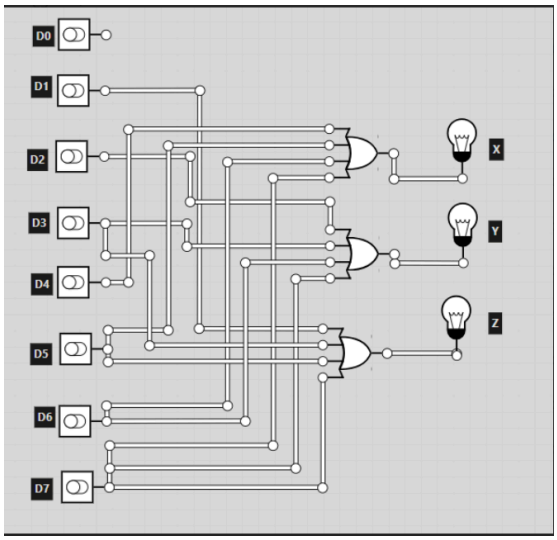

0	0	0	0	0	0	1	0	0	0	1	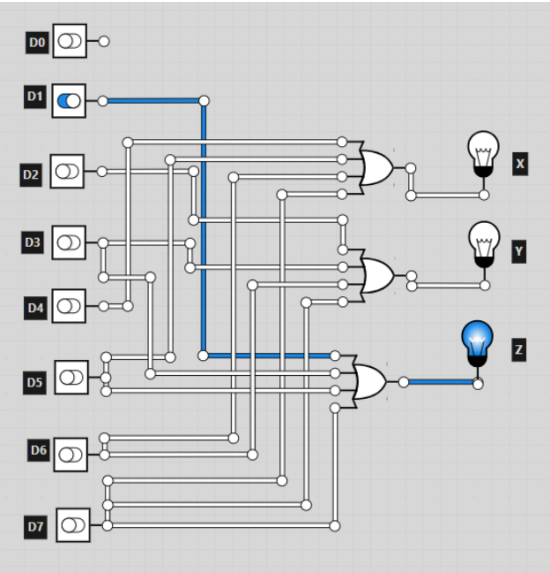
0	0	0	0	0	1	0	0	0	1	0	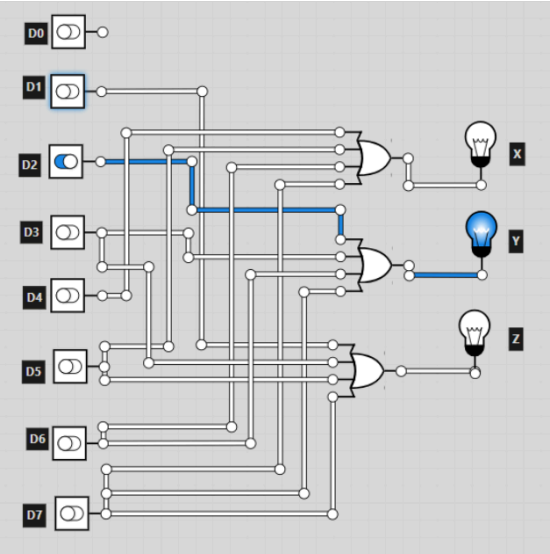

0	0	0	0	1	0	0	0	0	1	1	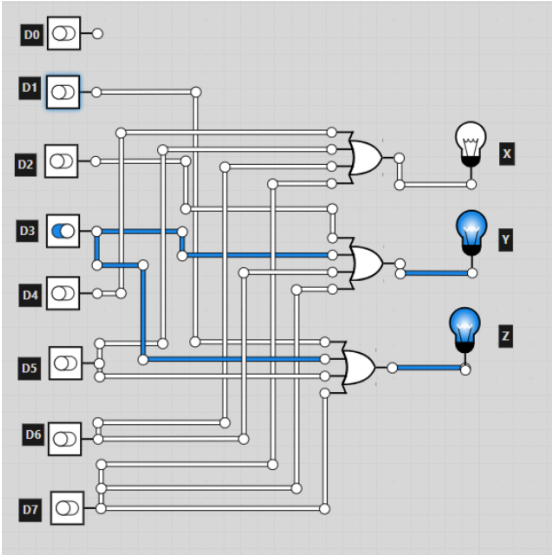
0	0	0	1	0	0	0	0	1	0	0	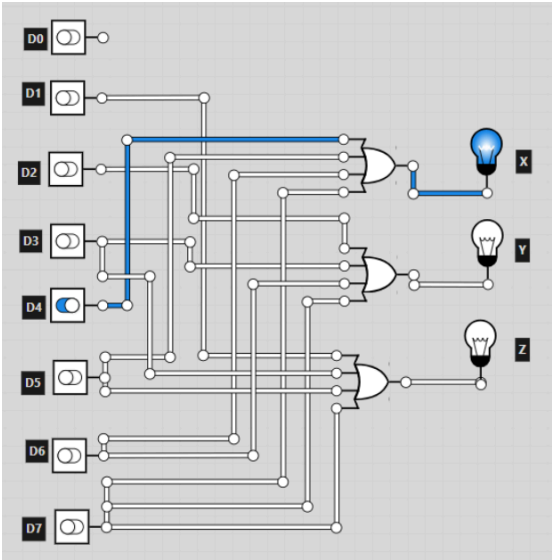

0	0	1	0	0	0	0	0	1	0	1	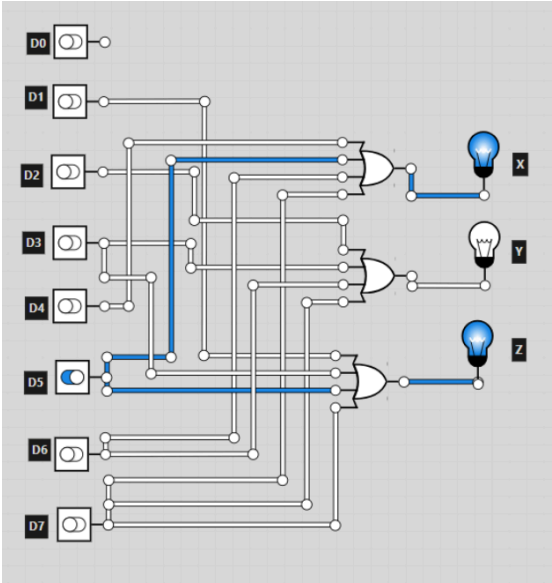
0	1	0	0	0	0	0	0	1	1	0	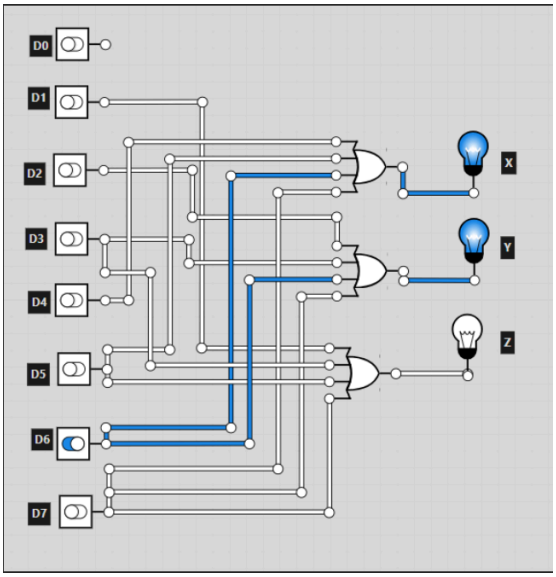

1	0	0	0	0	0	0	0	1	1	1	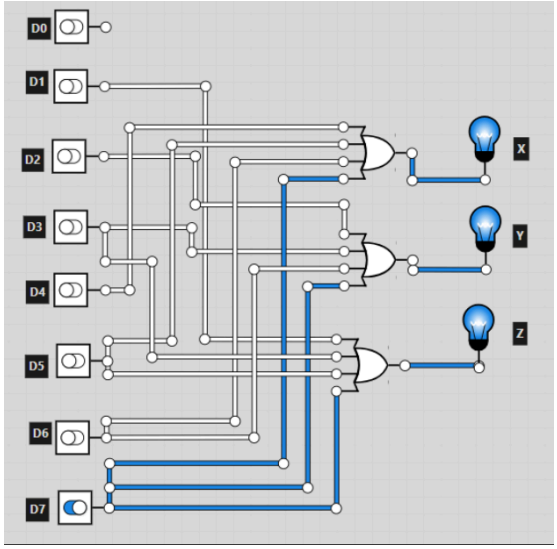

Table 8.2. 8-input to 3-output Encoder (before modification)

INPUT								OUTPUT			RESULT SIMULATION
D7	D6	D5	D4	D3	D2	D1	D0	X	Y	Z	
0	0	0	0	0	0	0	1	0	0	0	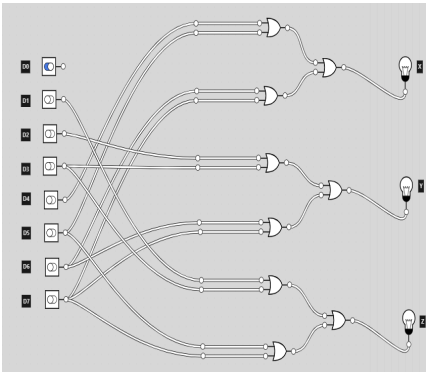

0	0	0	0	0	0	1	0	0	0	1	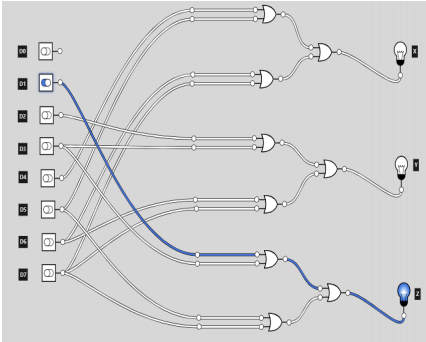	
0	0	0	0	0	1	0	0	0	1	0	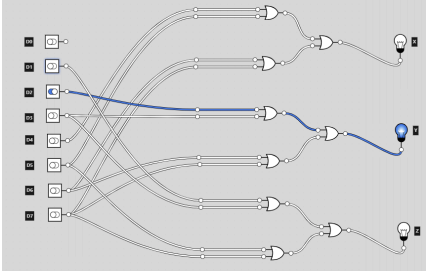	
0	0	0	0	1	0	0	0	0	1	1	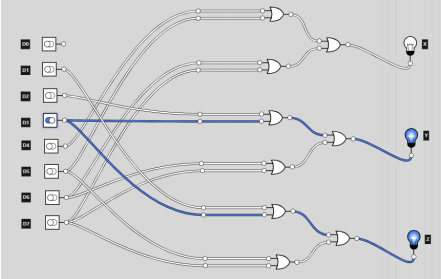	
0	0	0	1	0	0	0	0	1	0	0		

											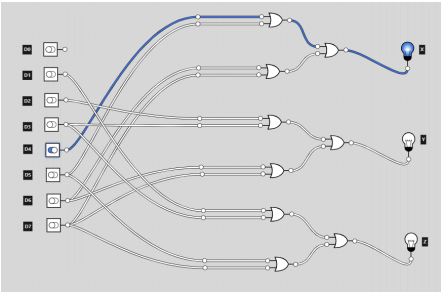
0	0	1	0	0	0	0	0	1	0	1	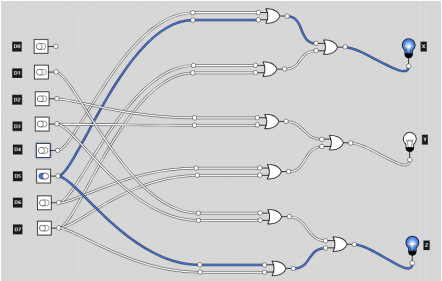
0	1	0	0	0	0	0	0	1	1	0	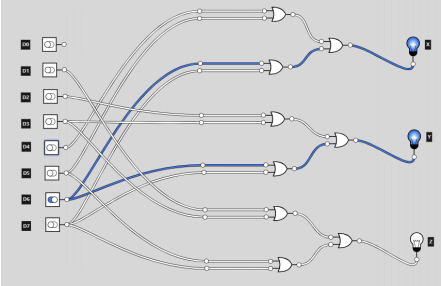
1	0	0	0	0	0	0	0	1	1	1	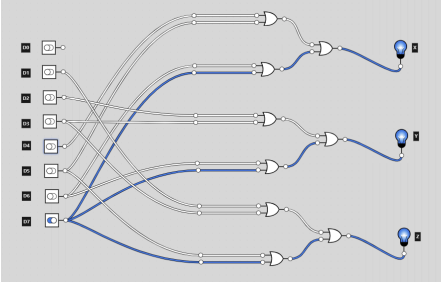

Table 8.2. 8-input to 3-output Encoder (after modification)

7. Final Output

Screenshot or print screen of TinkerCAD application different output simulations (5 points deductions for only one output in every required circuit). Also, upload a video of the simulated circuit naming or talking about the shown input combinations. Failure to comply to each instruction will resulted to 5 points deductions. Please include the recorded simulation video in this section and write at least one sentence definition or label for each figure or image.

SIMULATION VIDEOS: 8x3 Encoder Experiment #8 LCD
TINKERCAD: https://www.tinkercad.com/things/62iKBz47HhF-8x3-encoder

8. Conclusion:

Write a one paragraph (at least 10 sentences) Conclusion for this activity.

In this experiment, we successfully demonstrated and implemented the concept of an 8-to-3 encoder in Logicly and Tinkercad. We constructed the circuit based on the given logic diagram and verified its corresponding Boolean expressions. By applying different input combinations to the data switches, we observed and recorded the outputs in Table 8.1. The results confirmed that the encoder correctly converts a single active input into its equivalent 3-bit binary output. However, we also observed that when multiple inputs were activated at the same time, the output became undefined. Additionally, when all inputs were set to zero, the output produced 000, which created ambiguity since it is also the output for D0. To address these limitations, we modified the circuit by incorporating improvements based on the discussion, such as adding a valid bit or applying priority logic. After redrawing and simulating the modified circuit, we tested it again using different input combinations. The new results, recorded in Table 8.2, showed improved and more reliable behavior of the encoder. This experiment enhanced our understanding of encoders, their limitations, and the importance of proper circuit design in digital logic systems.

9. Questions:

1. What is your realization after completing the experiment regarding encoders?
   - After finishing the encoder experiment, we finally saw how encoders simplify digital systems by converting multiple inputs into a single binary output. It helped us understand combinational logic in real circuits and how truth tables connect to actual outputs. The experiment also showed why encoders cut down on circuit complexity and make systems more efficient.

2. What after modification of the given figure 8.2, do you think learning about limitation of one device could help the creator improve his/her critical thinking skill? Why? Why Not?
   - Yes, it can improve critical thinking skills because it exposes real-world constraints such as input limits or timing issues in the device. It makes you analyze how the system works under certain conditions and understand why it fails. This helps in forming assumptions and conclusions, making you better at identifying flaws and creating solutions.

9. Assessment (Rubric for Laboratory Performance):

Laboratory Performance Rubric (2)

Criteria	Ratings			Pts
Manipulative Skills	**3 pts** **Proficient** Student always demonstrate needed skills.	**2 pts** **Acceptable** Student occasionally demonstrate needed skills.	**1 pts** **Beginner** Student do not demonstrate needed skills.	3 pts
Experimental Set - up	**3 pts** **Proficient** Student are able to set-up the material with minimum supervision.	**2 pts** **Acceptable** Student are able to set-up the materials with supervision.	**1 pts** **Beginner** Student are unable to set-up the materials.	3 pts
Process Skills	**3 pts** **Proficient** Student always demonstrate targeted process skills.	**2 pts** **Acceptable** Student occasionally demonstrate targeted process skills.	**1 pts** **Beginner** Student do not demonstrate targeted process skills.	3 pts
Application of Technical Writing Skills	**3 pts** **Proficient** Correct spelling, grammar, and sentence construction when writing the Discussion, Observation, and Conclusion are applied in the laboratory report.	**2 pts** **Acceptable** Some minor incorrect spelling, wrong grammar, and wrong sentence construction when writing the Discussion, Observation, and Conclusion are applied in the laboratory report.	**1 pts** **Beginner** Many incorrect spelling, wrong grammar, and wrong sentence construction when writing the Discussion, Observation, and Conclusion are applied in the laboratory report.	3 pts
Time Management / Conduct of Experiment	**3 pts** **Proficient** Student finish ahead of time with complete data and time to revise data.	**2 pts** **Acceptable** Student finish on time with incomplete data.	**1 pts** **Beginner** Student do not finish on time with incomplete data.	3 pts
Complete Requirements of Laboratory Report	**3 pts** **Proficient** Student submitted a complete requirements set by the teacher.	**2 pts** **Acceptable** Student submitted an almost complete Laboratory Report according to requirements set by the teacher.	**1 pts** **Beginner** Student submitted a lot of missing requirements in the Laboratory Report according to requirements set by the teacher.	3 pts
Follow the Correct Format of Laboratory Report	**3 pts** **Proficient** Student submitted a correct format of Laboratory Report according to requirements set by the teacher.	**2 pts** **Acceptable** Student submitted an almost correct format of Laboratory Report according to requirements set by the teacher.	**1 pts** **Beginner** Student did not follow at all the format of Laboratory Report according to requirements set by the teacher.	3 pts
Ability to do independent work	**3 pts** **Proficient** Student do not need to be supervised by the teacher.	**2 pts** **Acceptable** Student require occasional supervision by the teacher.	**1 pts** **Beginner** Student require supervision by the teacher.	3 pts
				Total Points: 24